User Guide

Yoga Slim 7 (14", 10)

Read this first

Before using this documentation and the product it supports, ensure that you read and understand the following:

- *Generic Safety and Compliance Notices*
- *Safety and Warranty Guide*
- *Setup Guide*

HEVC Standard

This product may support digital video coding under certain versions of HEVC (High Efficiency Video Coding) standard and, if so, may be covered by patents at patentlist.accessadvance.com.

Fifth Edition (August 2026)

© Copyright Lenovo 2025, 2026.

LIMITED AND RESTRICTED RIGHTS NOTICE: If data or software is delivered pursuant to a General Services Administration “GSA” contract, use, reproduction, or disclosure is subject to restrictions set forth in Contract No. GS-35F-05925.

Contents

About this guide ii

Chapter 1. Meet your PC 1

Top view 1
- Antennas 1
- Keyboard 1
- Touchpad 1

Front view 2
- Microphones 3
- Infrared LED 3
- Infrared camera 3
- Camera 3
- Camera light 3
- Screen 3

Left view 4
- HDMI connector 4
- Multi-purpose USB Type-C connector 4
- Charging light 4

Right view 6
- Camera switch 6
- Power light 6
- Power button 7
- USB Standard-A connector 7
- Always-on connector 7

Bottom view 8
- Air vents (intake) 8
- Novo button hole 8
- Speakers 8

Specifications 9
- Statement on USB transfer rate 11
- Operating environment 11

Chapter 2. Explore your PC 12

Your PC and its operating system 12
- Initial setup of the Windows operating system 12
- Set up facial recognition 12
- Windows Update 12
- Windows recovery options 12

Use power efficiently 14
- Shut down your PC 14
- Put your PC into sleep mode 14
- Adjust timeout settings for saving power . . . 14

Set up Internet access 15

Interact effectively with your PC 15
- The display device 15
- Keyboard 17
- Bluetooth connectivity 20

Apps pre-instealled by Lenovo 20
- Lenovo Vantage 21
- Lenovo AI Now 21

Firmware 21
- Firmware setup program 21
- Set passwords in the firmware setup utility . . 22

Chapter 3. Help and support 25

Frequently asked questions 25
- What should I do if my computer stops responding 25
- What should I do if I spill liquid on the computer 25
- Why does my computer start automatically when I open the lid 25
- How can I start my PC from another device? 25

Self-help resources 25

What is a CRU? 26

CRUs for your product model 26

Call Lenovo 27
- Before you contact Lenovo 27
- Lenovo Customer Support Center 27

Purchase additional services 28

Chapter 4. PC and accessibility 29

Accessibility features of the PC hardware 29
- USB connectors for connecting assistive technology devices 29
- Keyboard accessibility 29
- Biometric devices 30

Accessibility features of Windows 11 30
- Configuring accessibility features in the Settings app 31
- Narrator 31
- Adjusting text sizes, applying a high-contrast theme, and using Magnifier 31
- Sticky Keys 32

Accessible user documentation 32
- Accessibility features of user documentation 32
- Testing documentation accessibility 33

Appendix A. Important notice for Quebec consumers 34

Appendix B. Notices and trademarks 35

© Copyright Lenovo 2025, 2026

About this guide

- This guide applies to Lenovo product model(s) listed below. Illustrations in this guide may look slightly different from your product model.

Model name	Machine type (MT)
– Yoga Slim 7 14AKP10 – Yoga Slim 7 14AKP10 1	83JY

- For further compliance information, refer to the *Generic Safety and Compliance Notices* at https://pcsupport.lenovo.com/docs/generic_notices.
- This guide may contain information about accessories, features, and software that are not available on all models.
- This guide contains instructions that are based on the Windows operating system. These instructions are not applicable if you install and use other operating systems.
- Microsoft® makes periodic feature changes to the Windows® operating system through Windows Update. As a result, the operating system related instructions may become outdated. Refer to Microsoft resources for the latest information.
- The content of the guide is subject to change without notice. To obtain the latest version, go to https://support.lenovo.com.

Chapter 1. Meet your PC

Top view

No.	Description
1	Wireless antennas
2	Keyboard
3	Touchpad

Antennas

The antennas transmit and receive radio waves to allow data to be transferred between your PC and a Wi-Fi network device or a Bluetooth device.

Note: The antennas are hidden inside the PC.

Keyboard

The keyboard is the PC's built-in input device for typing characters. It also includes keys that can make you more productive when interacting with the PC, apps, and the Windows operating system.

Note: Keyboard layouts vary by language and geographical location. The keyboard on your PC may look slightly different from those depicted in the product illustrations in this publication.

Touchpad

The touchpad is the PC's built-in pointing device. Slide your finger on the touchpad to move the pointer on the screen and tap or double-tap to select or execute a screen item.

The touchpad also supports Windows multi-finger gestures, providing a convenient alternative for switching between app windows and the desktop, activating the search box, or adjusting volumes.

© Copyright Lenovo 2025, 2026

Front view

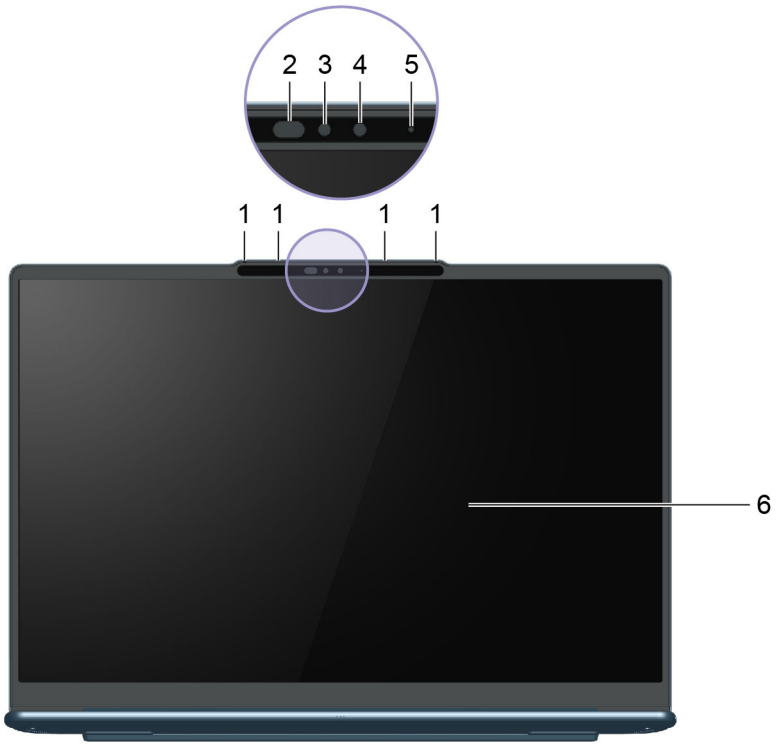

Figure 1. Front view of models with a non-touch screen

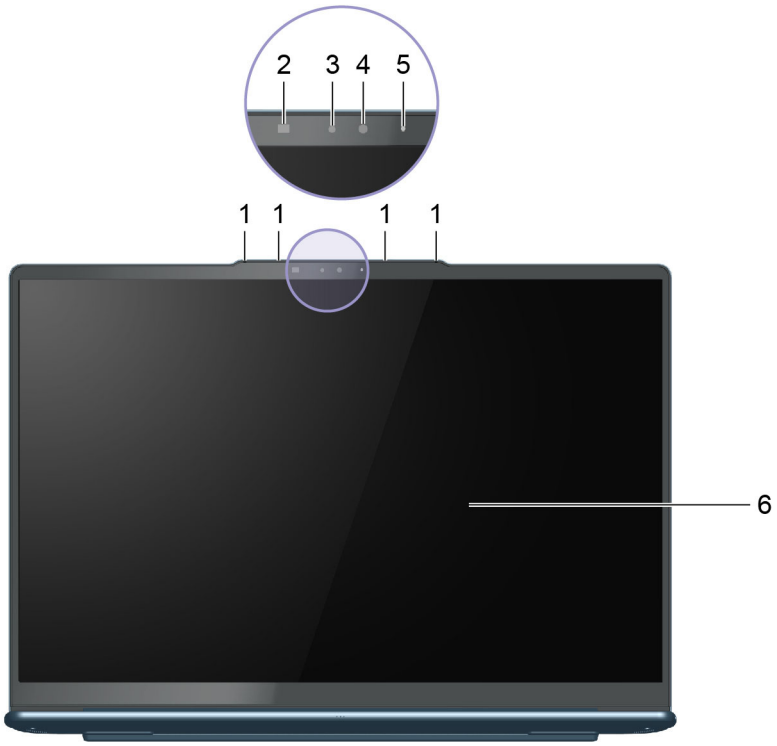

Figure 2. Front view of models with a touch-enabled screen

No.	Description
1	Microphones
2	IR LED
3	IR camera
4	Camera
5	Camera light
6	Screen

Microphones

The microphones are the PC's built-in sound input devices. They capture your voice and ambient sound and convert them into digital form. Microphones are essential components when you use your PC for video conferencing or voice recording.

Infrared LED

The infrared LED generates and emits near-infrared waves that are received and used by a camera (or a dedicated infrared camera) for facial recognition.

Infrared camera

The infrared camera receives near-infrared waves emitted by an infrared LED and reflected by a human face. It is used for facial recognition.

Camera

The built-in camera captures visible light and converts it to digital signals. It is used for video recordings and video conferencing.

Camera light

The camera light indicates whether the camera is activated.

Table 1. Camera light status and description

Camera light status	Description
On	The camera is activated.
Off	The camera is not activated.

Screen

The screen of the built-in display is where text, graphics, and videos are displayed.

Some models offer touch-enabled screens, which allow you to interact with your PC by intuitively touching buttons, icons, and menu items displayed on the screen. Touch-enabled screens also support multi-finger gestures.

Left view

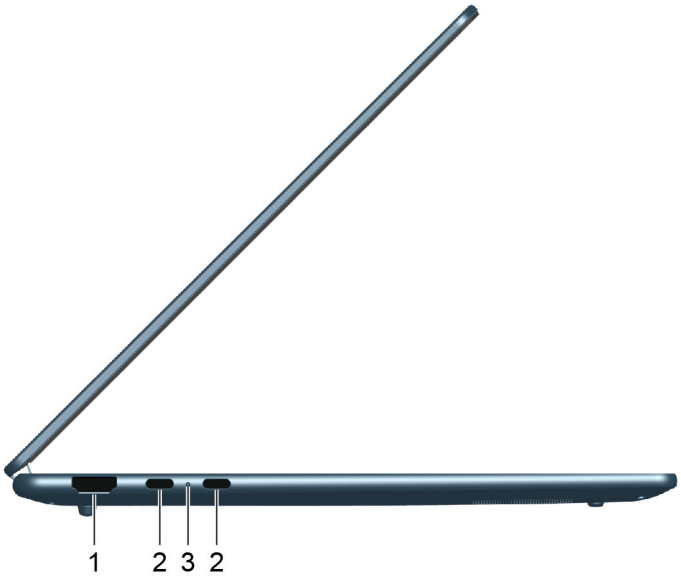

No.	Description
1	HDMI connector
2	Multi-purpose USB Type-C connector
3	Charging light

HDMI connector

The HDMI connector is used to connect an external display device, such as a television, a projector, or a monitor.

Multi-purpose USB Type-C connector

This USB Type-C® connector is the PC's power input connector. Use the included power adapter and this connector to supply power to the PC.

When this connector is not used by the included power adapter, it can also be used to connect:

- Storage or peripheral devices that follow the universal serial bus (USB) specification for data transfer and device interconnection
- Display devices

  Note: When connecting display devices, you need to use appropriate cables and adapters (if needed) according to the connection capabilities of the display device.
- USB4-enabled docks or devices

Charging light

The charging light indicates whether the PC is plugged into an electrical outlet. When the PC is plugged into an electrical outlet, the color of the light indicates whether the battery is fully charged (or will shortly be fully charged).

Table 2. Charging light statuses and descriptions

Light status	Plugged in?	Battery charge level
Off	No	/
On, amber	Yes	1%–90%
On, white	Yes	91%–100%

Right view

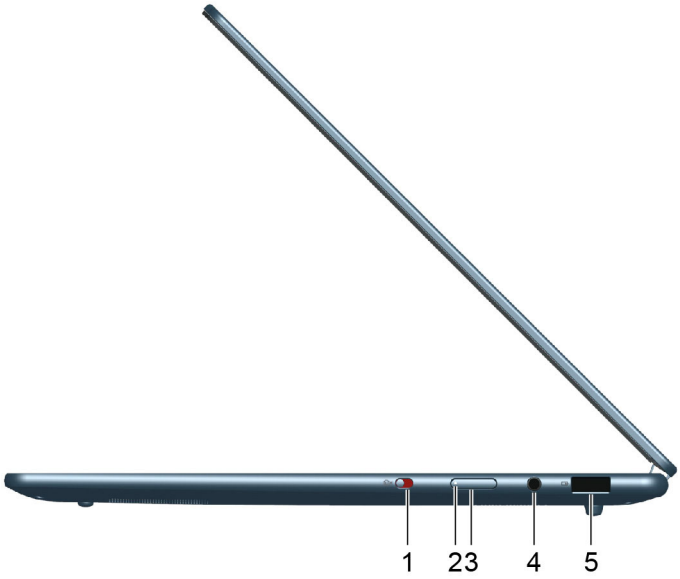

No.	Description
1	Camera switch
2	Power light
3	Power button
4	Combo audio jack
5	USB Standard-A connector

Camera switch

This toggle switch is used to enable or disable the built-in camera.

Note: This switch is designed for privacy protection. If you don't need to use the camera, slide the switch to the off position to prevent any apps from using the camera.

Power light

The power light indicates the current power state of the PC: whether it is powered on, powered off, in sleep mode, or in hibernation mode.

When the PC is powered on, this light can also indicate low battery by blinking rapidly.

Table 3. Power light status and description

Light status	Power state	Battery charge level
White (solid on)	Powered on	21%–100%
White (blinking rapidly)	Powered on	1%–20%
White (blinking slowly)	In sleep mode	/
Off	Powered off or in hibernation mode	/

Power button

Press the power button to turn on your PC.

Note: By default, on a Windows PC, pressing the power button when the PC is turned on will put the PC into sleep mode.

USB Standard-A connector

The USB Standard-A connector is used to connect storage or peripheral devices that follow the universal serial bus (USB) specification for data transfer and device interconnection.

Always-on connector

A USB connector with a battery icon (⊟) supports the always-on function. The PC can supply power to a USB device connected to this type of connector even when the PC is powered off, in sleep mode, or in hibernation mode.

The always-on function can be turned on and off in:

- The PC's firmware setup utility, or
- Lenovo Vantage or Lenovo PC Manager

Bottom view

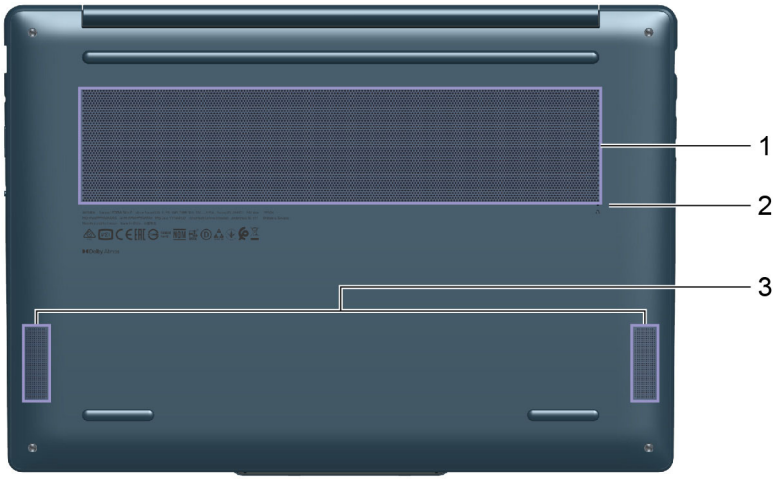

No.	Description
1	Ventilation slots (intake)
2	Novo button
3	Speakers

Air vents (intake)

The air vents allow air to be sucked inside of the PC to cool the internal components.

Important: When the PC is operating, do not place it on a bed, sofa, carpet, or other flexible surfaces. Otherwise, the air vents will be blocked and the PC may overheat, reducing performance or causing the PC to be unresponsive or even shut down.

Novo button hole

When the PC is powered off, you can press the Novo button to display the Novo button menu. From the menu, you can then choose to:

- Open the firmware setup utility
- Display the boot device selection menu
- Display the Windows advanced startup options page

Note: The Novo button is rarely used during normal PC operations. To prevent users from accidentally pressing it, the Novo button is placed in a recessed hole. You can use a straightened paper clip to press this button.

Speakers

The speakers are the PC's built-in sound output devices.

Specifications

Dimensions

Item	Value or specification
Width	317 mm
Depth	221 mm
Thickness	• 13.9 mm (T2) • 15.9 mm (T4)

ac power adapter

Item	Value or specification
Plug type	USB Type-C
Input	100–240 V ac, 50–60 Hz
Output voltage	20 V
Maximum current	3.25 A
Maximum power	65 W

Rechargeable battery pack

Item	Value or specification
Capacity	70 Wh
Cell type	Rechargeable Li-ion Battery
Number of cells	4

Memory

Item	Value or specification
Type	LPDDR5X
Installation	Onboard
Number of DIMM slots	0

Mass storage device

Item	Value or specification
Type	SSD
Slot	M.2 (2242)
Interface	PCIe Gen4

Display

Item	Value or specification
Size	14 inches
Type	OLED
Resolution	• 1920 × 1200, or • 2880 × 1800

Connectors

Item	Value or specification
HDMI connector	• Supported transmission mode: TMDS • Data lanes: 3 • Maximum data rate per lane: 6 Gbps
Multi-purpose USB Type-C connector	• Quantity: 2 • Maximum power output: 5 V, 3 A • Maximum power input: 20 V, 3.25 A • Protocols: – USB 2.0 480 Mbps – SuperSpeed USB 5 Gbps – SuperSpeed USB 10 Gbps – USB4 40Gbps – DisplayPort 2.1
USB Standard A connector	• Maximum power output: 5 V, 1.5 A • Protocols: – USB 2.0 480 Mbps – SuperSpeed USB 5 Gbps
Audio jack	• Diameter: 3.5 mm • Supported plug: – 3-pole, TRS – 4-pole, TRRS (CTIA and OMTP)

Note: Data transmission rates are presented as maximum theoretical values in compliance with applicable specifications. The actual data transmission rates depend on various factors, including the performance of the connected devices and the quality of the cables being used. These rates are typically slower than the maximum theoretical values listed.

Networking

Item	Value or specification
Wi-Fi standards	• 802.11 a/b/g • 802.11n • 802.11ac wave 2 • Wi-Fi 6 (802.11ax) • Wi-Fi 6E • Wi-Fi 7 **Note:** Different Wi-Fi standards may operate on different frequency bands. In some countries or regions, certain frequency bands may be prohibited for unlicensed use or may require specific conditions. Wi-Fi 6E and Wi-Fi 7 on this PC are disabled in some countries or regions in accordance with local regulations.
Bluetooth	Bluetooth 5.3

Statement on USB transfer rate

Depending on many factors such as the processing capability of the host and peripheral devices, file attributes, and other factors related to system configuration and operating environments, the actual transfer rate using the various USB connectors on this device will vary and will be slower than the data rate listed below for each corresponding device.

USB device	Data rate (Gbit/s)
3.2 Gen 1	5
3.2 Gen 2	10
USB4 40Gbps	40

Operating environment

Maximum altitude (without pressurization)

3048 m (10 000 ft)

Temperature

- At altitudes up to 2438 m (8000 ft)
  - Operating: 5°C to 35°C (41°F to 95°F)
  - Storage: 5°C to 43°C (41°F to 109°F)
- At altitudes above 2438 m (8000 ft)
  - Maximum temperature when operating under the unpressurized condition: 31.3°C (88°F)

  Note: When you charge the battery, its temperature must be no lower than 10°C (50°F).

Relative humidity

- Operating: 8% to 95% at wet-bulb temperature 23°C (73°F)
- Storage: 5% to 95% at wet-bulb temperature 27°C (81°F)

Chapter 2. Explore your PC

Your PC and its operating system

The operating system is essential software for a PC. It manages the hardware devices of the PC, provides utility applications and user interfaces, and enables the installation of various applications for a wide range of purposes.

Your PC comes with Windows 11 pre-installed.

Initial setup of the Windows operating system

When you turn on your PC for the first time, the Windows operating system will guide you through the initial setup process. Most importantly, you will:

- Create a user account
- Connect to a wireless network that has Internet access
- Select language-related settings

Note: If you choose to set up Windows for personal use, you must either use an existing Microsoft account or create a new one. You can switch to a local account after the initial setup.

Set up facial recognition

Apart from text-based passwords, Windows 11 supports additional user authentication methods for PCs with the required hardware devices. For PCs equipped with a built-in infrared LED and an infrared camera, you can enable facial recognition to sign into Windows using your face.

Step 1. Select **Start → Settings → Accounts → Sign-in options → Facial recognition**.

Step 2. Select **Set up → Get started** and follow on-screen instructions to enroll your face.

Note: If you are using a local account to sign into Windows, you must set a password for the account before you can enable facial recognition.

Windows Update

From time to time, your PC receives update notifications. These notifications may include new features, security updates, and device drivers. While security-related updates are typically downloaded and installed automatically, you can manually control the installation of other available updates.

In Windows Update, you can view available updates, manually check for updates, and configure settings related to updates. To navigate to Windows Update, select **Settings → Windows Update**.

Windows recovery options

While using your PC, you may encounter various issues. Windows provides several recovery options to help restore your system to normal functionality. The table below will help you choose the right option for different situations.

© Copyright Lenovo 2025, 2026

Table 4. Windows recovery options

Situations	Recovery options
Windows runs much slower after you install an app.	Restore Windows from a system restore point.
Windows hasn't been functioning properly for some time.	Reset your PC while keeping your personal files.
Your PC won't start.	Utilize Windows startup repair function.
Your PC won't start and cannot be repaired using Windows startup repair function.	Use a recovery drive to restore Windows.

Reset Windows

Resetting Windows allows you to reinstall the operating system while retaining your personal files. This gives the operating system a fresh start and, in some cases, restores the PC's original performance.

Step 1. Select **Settings** → **System** → **Recovery**.

Step 2. Under recovery options, select **Reset PC**.
When prompted, choose between **Keep my files** and **Remove everything**.

Step 3. Follow the on-screen instructions to complete the reset process.

Create a recovery drive

It is advisable to create a recovery drive after completing the initial setup of Windows. If you encounter a significant issue that prevents Windows from starting, you can use the recovery drive to restore the operating system on your PC.

Step 1. Prepare an empty USB drive with a storage capacity of 32 GB or more.

Step 2. In the search box on the taskbar, type `Create a recovery drive` and select the matched app.

Step 3. Make sure **Back up system files to the recovery drive** checkbox is selected and select **Next**.

Step 4. When prompted, connect the USB drive to your PC, select it, and then select **Next**.

Step 5. Select **Create**.

Restore Windows using a recovery drive

If the Windows operating system fails to start, you can use a previously created recovery drive to restore Windows onto your PC.

Step 1. Shut down your PC.

Step 2. Connect the recovery drive to your PC.

Step 3. Press the Novo button or the Lenovo Smart Key ☆ to open the Novo button menu.

Step 4. Select **Boot Menu**.

Step 5. Select the USB drive as the boot device.
The PC will start to the Windows Recovery Environment.

Step 6. Follow the on-screen instructions to restore Windows onto your PC.

Use power efficiently

As an electronic device, your PC requires electricity to operate. The Windows operating system provides advanced power management features for the devices included in your PC. You can take advantage of these features to use your PC in an energy-efficient manner.

Shut down your PC

When you have finished using your PC and do not plan to resume shortly, shut it down.

Step 1. Select **Start → Power**.

Step 2. Select **Shut down**.

Put your PC into sleep mode

If you need to stop using your PC but plan to resume shortly, you can put it into sleep mode. Your PC will wake up more quickly from sleep mode, allowing you to return to where you left off with your work.

Step 1. Select **Start → Power**.

Step 2. Select **Sleep**.

Adjust timeout settings for saving power

Setting appropriate timeouts for your PC to enter sleep mode and for the built-in screen to turn off is an effective method of reducing your PC's power consumption. The Windows operating system comes with default timeout settings for these two items, which you can adjust to better suit your preferences.

Step 1. Select **Start → Settings → System → Power & battery → Screen, sleep, & hibernation timeouts**.

Step 2. Adjust the settings.
For notebook PCs, you can set distinct timeouts for two usage scenarios: when the PC is plugged in and when it is running on battery power.

Default timeout settings for power saving

The operating system on your PC has the following timeouts enabled by default. You can adjust these settings to better suit your preferences.

Note: Setting appropriate timeouts is an effective method of reducing your PC's power consumption. Avoid setting excessively long timeouts to effectively disable this power-saving feature.

Table 5. Default timeout settings for the PC to enter sleep mode and the screen to turn off

Power saving action	Power state	Timeout (minute)
Turn off the screen	Plugged in	5
	On battery	3
Put the PC into sleep mode	Plugged in	5
	On battery	3

Note: To wake the PC from sleep mode, press the power button or any key on the keyboard.

Set up Internet access

In your home or office, Internet access is typically provided through Wi-Fi-enabled networks. You can connect to such a network to access the Internet. The Windows operating system provides utilities that assist in searching, connecting to, and managing wireless networks within range.

Step 1. Select the Network, Sound, and Battery icons ( ) on the right side of the taskbar to open quick settings.

Step 2. On the quick settings pane, select the > symbol next to the network icon.
Wireless networks within range should be displayed.

Step 3. Select the network you want to connect to and then select **Connect**.

Step 4. Enter the network security key when prompted.

Interact effectively with your PC

You interact with your PC through its input and output devices. You spend a significant amount of time looking at the screen, where the user interface and content are displayed. The speakers produce sound, allowing you to listen to music or a voice recording. You type with the keyboard and navigate with the touchpad. You can join and participate in a web conference using the built-in camera and microphone.

Apart from the built-in devices, you can connect both wired and wireless external devices to enhance your interaction with your PC.

The display device

The built-in display is your PC's primary visual output device. Your PC is also equipped with one HDMI connector and two multi-purpose USB Type-C connectors. Using one or several of those connectors, you can connect external display devices to your PC to enhance productivity.

The display for select models is touch-enabled. For those models, you can tap and swipe directly on the screen. You can also use multi-touch gestures on the screen to navigate within Windows more efficiently.

Touch screen gestures

The screen of select models of this PC is touch-enabled. If your PC is equipped with a touch-enabled display, you can tap or swipe on the screen to interact with your PC. In addition, the Windows operating system also supports multi-finger gestures on the touch screen to enhance productivity while interacting with the operating system.

Table 6. Touch screen gestures

Gesture	Function
Swipe in from the left edge of the screen	Shows Widgets
Swipe in from the right edge of the screen	Shows Notification Center
Swipe in from the bottom edge of the screen	Shows the Start menu
Swipe vertically with two fingers	Scrolls pages
Place two fingers on the screen and pinch in or stretch out	Zooms out / zooms in
Swipe up with three fingers	Shows all open windows
Swipe down with three fingers	Retruns to the desktop

Adjustable display refresh rate

Your eyes might not notice it but the content displayed on the computer screen refreshes constantly. Display refresh rate refers to the number of times per second the screen content refreshes itself and is measured in hertz (Hz).

A refresh rate of 60 Hz is adequate for most situations and is energy efficient. However, when viewing videos or playing video games, a higher refresh rate usually provides a smoother viewing experience.

The displays of some Lenovo computers support dual refresh rates. For such a computer, you can manually switch its display to work at either the higher or lower refresh rate. For Windows operation systems, the manual settings are usually found in **Settings → System → Display**. As a shortcut, you can also use the key combination Fn + R to switch the display refresh rate.

Note: Not all displays support dual refresh rates. If you cannot find settings to change the display refresh rate, the refresh rate of the display might be fixed or cannot be manually changed.

Turn on night light

The night light feature in Windows 11 enables users to switch to warmer color tones, reducing blue light emission to alleviate eye strain or fatigue.

Step 1. Open the quick settings menu by selecting the network, sound, or battery icons ( ) on the far right of the taskbar or by using the keyboard shortcut ⊞ + A.

Step 2. Select the button for night light to turn it on or off.

For more tips on reducing eye strain or fatigue, visit https://www.lenovo.com/us/en/compliance/visual-fatigue.

Adjust color temperature

If Windows 11 night light mode is turned on, you can adjust the color temperature of the screen.

Step 1. Select **Start → Settings**.

Step 2. Select **System → Display → Night light settings**.

Step 3. Move the slider to adjust the color temperature.

Connecting external displays

You can use the HDMI connector or either of the USB Type-C connectors on your PC to connect external display devices. Depending on the connection capability of the display device, you have several options for connecting displays.

Direct connection using the HDMI connector

HDMI is a leading digital interface for transmitting high-definition video, audio, and data, specifically designed for connecting display devices. Many devices, such as computer monitors and projectors, are equipped with either an HDMI plug or an HDMI input connector. To connect such an external display device to your computer, simply plug the HDMI cable into the HDMI connector on your PC.

Connection using a USB Type-C connector

Both USB Type-C connectors on your PC support DisplayPort Alt Mode. Some modern computer monitors are equipped with a USB Type-C connector that also supports DisplayPort Alt Mode. To connect such a monitor to your PC, use a double-sided USB Type-C cable (not included with the PC). Plug one end of the cable into either of the two USB Type-C connectors on your PC and the other end into the USB Type-C connector on the monitor.

Some computer monitors are equipped with a DisplayPort connector but do not have a USB Type-C connector. To connect these monitors, you will need to purchase and use a USB Type-C to DisplayPort adapter. Simply plug the adapter into one of the two USB Type-C connectors on your PC, and then connect the monitor to the adapter's DisplayPort.

Connection using a docking station

A USB4-certified docking station can be connected to expand your PC's connectivity capabilities. Use a double-sided USB Type-C cable to connect the PC to the downstream USB Type-C connector on the docking station. You can then connect the display to the DisplayPort or HDMI connector on the docking station.

Keyboard

Shortcut keys

A Lenovo keyboard usually includes the following shortcut keys that you can use to quickly access apps or adjust settings.

- Functions keys (F1–F12)
- Hotkeys
- Combination keys using the fn key
- Combination keys using the Windows logo key
- The Copilot key

Hotkeys

Hotkeys provide quick access to frequently used settings and applications. Typically located in the top row of the keyboard, they often share keys with the function keys (F1–F12) and several other keys. Each hotkey's function is denoted by the icon printed on the key.

Table 7. Hotkey functions

Hotkey icon	Function description
	Mutes/Unmutes sound.
	Decreases volume.
	Increases volume.
	Enables/Disables the microphone.
	Decreases screen brightness.
	Increases screen brightness.
	Selects and sets up display devices.
	Enables/Disables airplane mode.
	Opens the Settings app.
	Locks the screen.
	Opens a device collaboration app that is pre-installed on your PC.

Table 7. Hotkey functions (continued)

Hotkey icon	Function description
	Opens the Calculator app.
	Opens Lenovo AI Now. **Note:** If Lenovo AI Now is not pre-installed, this hotkey opens the Lenovo Smart Key quick launch panel.

The FnLock switch

The FnLock is an electronic switch that affects how you use hotkey functions. To turn it on and off, press Fn + Esc.

Note: The Esc key is in the upper left corner of the keyboard. It has an LED that indicates the status of the FnLock switch.

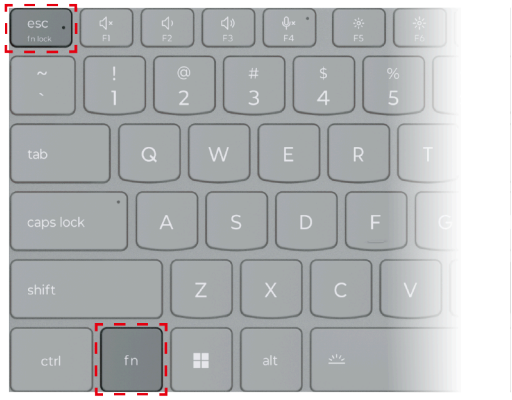

Figure 3. Locations of the FnLock key and the Fn key

A Lenovo keyboard usually contains hotkeys in the top row. These hotkeys share keys with the function keys (F1–F12) and other keys. For these dual-function keys, the icons or characters denoting the primary functions are printed on top of the icons and characters denoting the secondary functions.

- A: an icon or character denoting the primary function
- B: an icon or character denoting the secondary function

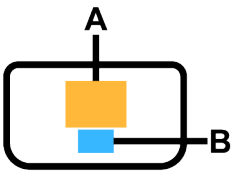

Figure 4. The layout of a dual-function key

Table 8. **FnLock** *and dual-function keys*

FnLock (Esc) **LED**	FnLock **status**	**Pressing the hotkey alone**	**Pressing the hotkey while holding down the Fn key**
Off	Disabled	Primary function	Secondary function
On	Enabled	Secondary function	Primary function

Combination keys using the fn key

The fn key can be used in combination with specific keys to adjust device settings or activate additional functions.

Table 9. fn-based key combinations

Key combination	**Function**
fn + Q	Switches the PC's active power mode
fn + R*	Switches the refresh rates of the built-in display
fn + M	Enables/disables the touchpad
fn + N*	Shows key device information
fn + Space	Adjusts keyboard backlight
fn + B	Break
fn + P	Pause
fn + S	SysRq
fn + K	ScrLk
fn + I	Insert
fn + T	PrtScr
fn + left arrow	Home
fn + right arrow	End
fn + up arrow	PgUp
fn + down arrow	PgDn

Note: Some models are equipped with displays that have a fixed refresh rate. For these models, the Fn + R key combination does not perform any function. The Fn + N key combination may not function on models sold in mainland China. You can view the device information in Lenovo PC Manager.

Combination keys using the Windows logo key

The Windows logo key is located in the lower-left corner of the keyboard. It can be used alone or in combination with specific keys to quickly change settings and access utilities within the Windows operating system. The table below lists frequently used key combinations. For a complete list of all key combinations that utilize the Windows logo key, please refer to the official Microsoft online documentation.

Table 10. Windows logo key combinations

Key or key combination	**Function**
Windows logo key ⊞	Opens or closes the Start menu
+ A	Opens or closes Quick Settings

Table 10. Windows logo key combinations (continued)

Key or key combination	Function
+ D	Returns to the desktop
+ E	Opens File Explorer
+ I	Opens Settings
+ L	Locks the screen
+ M	Minimizes all open windows
+ N	Opens or closes the Notification Area
+ P	Switches multi-screen modes
+ W	Opens or closes Widgets
+ ; (semicolon)	Opens the emoji panel
+ Tab	Opens or closes Task View
+ PrtSc	Takes a full-screen screenshot and saves it to a file

The Copilot key

The era of AI has arrived, and many Lenovo PCs now include a Copilot key on the keyboard. It is located either in the bottom or the top row of the keyboard and is marked with .

For Windows PCs with Copilot in Windows available and enabled, pressing the Copilot key opens Copilot in Windows. Otherwise, pressing the Copilot key opens Windows Search.

Bluetooth connectivity

Bluetooth is a short-range wireless technology commonly used for connections between nearby devices. Your PC is equipped with a built-in Bluetooth adapter. You can connect other Bluetooth-enabled devices to your PC. Bluetooth-enabled headphones, earbuds, loudspeakers, keyboards, and mouses are among the devices you may consider connecting to your PC.

Connect a Bluetooth-enabled device to your PC

Establishing a Bluetooth connection requires actions on both the device and your PC. Turn on the device and make it discoverable before performing any actions on your PC.

Step 1. Select **Settings → Bluetooth & devices → Add device → Bluetooth**.

Step 2. Select the device you want to connect, and then select **Connect**.

Step 3. Depending on the type of device, you may need to either confirm the connection on the device side or enter a pairing code on your PC.

When a Bluetooth-enabled device is connected to your PC, its name and status are displayed under **Bluetooth & devices** on your PC .

Apps pre-instealled by Lenovo

As a PC manufacturer, Lenovo also develops various apps and pre-installs some of them on your PC. These apps are mainly designed to:

- Provide an interface for users to set up the various devices included within the PC
- Provide an interface for users to enable, disable, and configure features

- Provide an interface for users to view device information and update device drivers
- Provide new features or enhance your experience for specific usage scenarios

Lenovo Vantage

Lenovo Vantage is a one-stop solution to help you update your computer, configure hardware settings, and access personalized support.

If your computer is pre-installed with Lenovo Vantage, type `Vantage` in the Windows search box to launch this app.

Note: If you purchase your Lenovo PC in mainland China, Lenovo PC Manager may be pre-installed instead of Lenovo Vantage. Lenovo PC Manager offers features similar to those of Lenovo Vantage and may include functionalities specifically tailored for local users.

Lenovo AI Now

Lenovo AI Now is your personal and private AI assistant. It enables you to boost your productivity by building your personal knowledge library, helps you with inspiration, writing and summarizing, and provides troubleshooting and quick settings for your PC.

To open Lenovo AI Now, type `Lenovo AI Now` in the Windows search box and select the matched result. Alternatively, you can also press the hotkey marked with ☆ as a shortcut.

Notes:

- Lenovo AI Now is not available on all product models. For those models not pre-installed with this app, pressing the hotkey ☆ will open the Lenovo Smart Key quick launch panel.
- Lenovo AI Now makes periodic updates to keep improving your experience. Features may be added or modified after updates are installed.

Firmware

When you power on your PC, a series of instructions are executed to initialize devices, identify a boot device, and locate a program called the bootloader. The bootloader then searches for the operating system installed on your PC and transfers control to it. Once the operating system has started, your PC is ready for use.

These instructions are stored on a flash memory chip located on the PC's system board. The flash memory chip and the instructions it contains are collectively referred to as the PC's firmware.

Firmware setup program

Lenovo PCs typically include a setup program in the firmware that allows you to:

- View information about your PC and its devices
- Change device settings
- Change the order of boot devices
- Set passwords for the firmware and the mass storage device

Note: You should rarely need to use the setup program for your daily PC usage. To view device information, you can use the utilities provided by the operating system or applications provided by Lenovo (Lenovo Vantage or Lenovo PC Manager). You can use the Novo button menu to temporarily change the order of boot devices.

There are several ways to open the setup program:

- Utilize the Advanced startup feature of the Windows operating system
- Use the Novo button menu
- Start or restart your PC and press an interrupt key (F1 or F2)

Set passwords in the firmware setup utility

You can set passwords in the firmware setup utility to secure access to the utility program or the mass storage device.

Password types

You can set various types of passwords in the firmware setup utility.

Password type	Pre-requisite	Usage
Administrator password	No	You must enter it to start the setup utility.
User password	The administrator password must be set.	You can use the user password to start the setup utility.
Master hard disk password	No	You must enter it to start the operating system.
User hard disk password	The master hard disk password must be set.	You can use the user hard disk password to start the operating system.

Note: If you start the setup utility using the user password, you can only change a few settings.

Set administrator password

You set the administrator password to prevent unauthorized access to the firmware setup utility.

Attention: If you forget the administrator password, a Lenovo authorized service personnel cannot reset your password. You must take your computer to a Lenovo authorized service personnel to have the system board replaced. Proof of purchase is required and a fee will be charged for parts and service.

Step 1. Open the firmware setup utility.

Step 2. Select **Security → Set Administrator Password** and press Enter.

Step 3. Enter a password string that contains only letters and numbers and then press Enter

Step 4. Enter the password again and press Enter.

Step 5. Select **Exit → Exit Saving Changes**.

Next time you start the computer, you must enter the administrator password to open the setup utility. If **Power on Password** is enabled, you must enter the administrator password or the user password to start the computer.

Change or remove administrator password

Only the administrator can change or remove the administrator password.

Step 1. Open the firmware setup utility using the administrator password.

Step 2. Select **Security → Set Administrator Password** and press Enter.

Step 3. Enter the current password.

Step 4. In the **Enter New Password** text box, enter the new password.

Step 5. In the **Confirm New Password** text box, enter the new password again.

Note: If you want to remove the password, press Enter in both text boxes without entering any character.

Step 6. Select **Exit** → **Exit Saving Changes**.

If you remove the administrator password, the user password is also removed.

Set user password

You must set the administrator password before you can set the user password.

The administrator of the setup utility might need to set a user password for use by others.

Step 1. Open the firmware setup utility using the administrator password.

Step 2. Select **Security** → **Set User Password** and press Enter.

Step 3. Enter a password string that contains only letters and numbers and then press Enter.
The user password must be different from the administrator password.

Step 4. Enter the password again and press Enter.

Step 5. Select **Exit** → **Exit Saving Changes**.

Enable power-on password

If the administrator password has been set, you can enable power-on password to enforce greater security.

Step 1. Open the firmware setup utility.

Step 2. Select **Security** → **Power on Password** and press Enter.

Note: The administrator password must be set in advance.

Step 3. Change the setting to **Enabled**.

Step 4. Select **Exit** → **Exit Saving Changes**.

If power-on password is enabled, a prompt appears on the screen every time you turn on the computer. You must enter the administrator or user password to start the computer.

Set passwords for the mass storage device

You can set a hard disk password in the setup utility to secure access to your data storage on the PC's mass storage device.

Attention: Be extremely careful when setting a hard disk password. If you forget the hard disk password, a Lenovo authorized service personnel cannot reset your password or recover data from the hard disk. You must take your computer to a Lenovo authorized service personnel to have the hard disk drive replaced. Proof of purchase is required and a fee will be charged for parts and service.

Step 1. Open the firmware setup utility.

Step 2. Select **Security** → **Set Hard Disk Password** and press Enter.

Note: If you start the setup utility using the user password, you cannot set hard disk password.

Step 3. Follow on-screen instructions to set both master and user passwords.

Note: The master and user hard disk passwords must be set at the same time.

Step 4. Select **Exit** → **Exit Saving Changes**.

If the hard disk password is set, you must provide the correct password to start the operating system.

Change or remove passwords for the mass storage device

Step 1. Open the firmware setup utility.

Step 2. Select **Security**.

Step 3. Change or remove the hard disk password.

To change or remove master password, select **Change Master Password** and press Enter.

Note: If you remove the master hard disk password, the user hard disk password is also removed.

To change user password, select **Change User Password** and press Enter.

Note: The user hard disk password cannot be removed separately.

Step 4. Select **Exit → Exit Saving Changes**.

Chapter 3. Help and support

Frequently asked questions

What should I do if my computer stops responding

Press and hold the power button until the computer turns off. Then restart the computer.

What should I do if I spill liquid on the computer

1. Carefully unplug the ac power adapter and turn off the computer immediately. The more quickly you stop the current from passing through the computer the more likely you will reduce damage from short circuits.

   Attention: Although you might lose some data or work by turning off the computer immediately, leaving the computer on might make your computer unusable.

2. Wait until you are certain that all the liquid is dry before turning on your computer.

   CAUTION:
   Do not try to drain out the liquid by turning over the computer. If your computer has keyboard drainage holes on the bottom, the liquid will be drained out through the holes.

Why does my computer start automatically when I open the lid

Your computer may have Flip to Start enabled. Many Lenovo notebook computers include a sensor that can detect the angle at which the lid is opened. When you open the lid, the sensor can detect this behavior. If Flip to Start is enabled, the computer will respond by starting up automatically.

If you don't like this feature, you can disable it. Flip to Start can be enabled or disabled in the setup utility program for the PC's firmware.

How can I start my PC from another device?

You can open the Novo button menu, select **boot device**, and select a device to start your PC.

Self-help resources

Use the following self-help resources to learn more about the computer and troubleshoot problems.

Resources	How to access?
Troubleshooting and frequently asked questions	• https://www.lenovo.com/tips • https://forums.lenovo.com
Accessibility information	https://www.lenovo.com/accessibility

© Copyright Lenovo 2025, 2026

Resources	How to access?
Product documentation: • *Generic Safety and Compliance Notices* • *Safety and Warranty Guide* • *Setup Guide* • This *User Guide* • *Regulatory Notice*	1. Go to https://support.lenovo.com. 2. Detect your computer or select computer model manually. 3. Select **Guides & Manuals** and filter out the documentation you want.
Lenovo Support Web site with the latest support information of the following: • Product and service warranty • Product and parts details • Knowledge base and frequently asked questions	Visit https://support.lenovo.com
Windows help information	• Use **Get Help** or **Tips**. • Use Windows Search. • Microsoft support Web site: https://support.microsoft.com

What is a CRU?

Customer replaceable units (CRUs) are parts that can be upgraded or replaced by the customer. A Lenovo computer may contain the following types of CRUs:

Self-service CRU	Parts that can be installed or replaced easily by customer themselves or by trained service technicians at an additional cost.
Optional-service CRU	Parts that can be installed or replaced by customers with a greater skill level. Trained service technicians can also provide service to install or replace the parts under the type of warranty designated for the customer's machine.

If you intend to install a CRU, Lenovo will ship the CRU to you. You might be required to return the defective part that is replaced by the CRU. When return is required: (1) return instructions, a prepaid shipping label, and a container will be included with the replacement CRU; and (2) you might be charged for the replacement CRU if Lenovo does not receive the defective CRU within thirty (30) days of your receipt of the replacement CRU. For full details, see the *Lenovo Limited Warranty* at https://www.lenovo.com/warranty/llw_02.

CRUs for your product model

The table below lists the CRUs and CRU types that are defined for your product model.

Part	Self-service CRU	Optional-service CRU
Power cord*	X	
ac power adapter	X	

Notes:

- Some models come with a wall-mounted ac power adapter and does not include a power cord.
- CRU replacement instruction is provided in one or more of the following publications and are available from Lenovo at any time upon your request.

  the product *User Guide*

  the printed publications that came with the product
- Replacement of any parts not listed above, including the built-in rechargeable battery, should be done by a qualified repair technician or by ensuring that you carefully follow all instructions provided by Lenovo. You can also find Lenovo-authorized repair facilities by going to https://support.lenovo.com/partnerlocator for more information.

Call Lenovo

If you have tried to correct the problem yourself and still need help, you can call Lenovo Customer Support Center.

Before you contact Lenovo

Record product information and problem details before you contact Lenovo.

Product information	Problem symptoms and details
• Product name • Machine type and serial number	• What is the problem? Is it continuous or intermittent? • Any error message or error code? • What operating system are you using? Which version? • Which software applications were running at the time of the problem? • Can the problem be reproduced? If so, how?

Note: The product name and serial number can usually be found on the bottom of the computer, either printed on a label or etched on the cover.

Lenovo Customer Support Center

During the warranty period, you can call Lenovo Customer Support Center for help.

Telephone numbers

For a list of the Lenovo Support phone numbers for your country or region, go to https://pcsupport.lenovo.com/supportphonelist.

Note: Phone numbers are subject to change without notice. If the number for your country or region is not provided, contact your Lenovo reseller or Lenovo marketing representative.

Services available during the warranty period

- Problem determination - Trained personnel are available to assist you with determining if you have a hardware problem and deciding what action is necessary to fix the problem.
- Lenovo hardware repair - If the problem is determined to be caused by Lenovo hardware under warranty, trained service personnel are available to provide the applicable level of service.
- Engineering change management - Occasionally, there might be changes that are required after a product has been sold. Lenovo or your reseller, if authorized by Lenovo, will make selected Engineering Changes (ECs) that apply to your hardware available.

Services not covered

- Replacement or use of parts not manufactured for or by Lenovo or nonwarranted parts
- Identification of software problem sources
- Configuration of UEFI/BIOS as part of an installation or upgrade
- Changes, modifications, or upgrades to device drivers
- Installation and maintenance of network operating systems (NOS)
- Installation and maintenance of programs

For the terms and conditions of the Lenovo Limited Warranty that apply to your Lenovo hardware product, see “Warranty information” in the *Safety and Warranty Guide* that comes with your computer.

Purchase additional services

During and after the warranty period, you can purchase additional services from Lenovo at https://pcsupport.lenovo.com/warrantyupgrade.

Service availability and service name might vary by country or region.

Chapter 4. PC and accessibility

PCs are powerful general-purpose computing devices that many individuals rely on for accessing information, connecting with friends, pursuing education, conducting research, and completing work tasks. This reliance extends to individuals with vision, hearing, cognitive, or mobility impairments, as well as to those whose abilities may decline due to illness or aging.

This chapter explores the accessibility features available on your Lenovo PC, including both hardware components and those offered by the pre-installed operating system. By gaining a comprehensive understanding of the available accessibility features and how to activate and configure them, you can enhance your PC's usability for individuals with disabilities.

Accessibility features of the PC hardware

Lenovo PCs are designed with accessibility in mind. Throughout the design process, special considerations are prioritized for individuals with disabilities and best industry practices are implemented in hardware design.

USB connectors for connecting assistive technology devices

Several types of assistive technology devices are available on the market that can be connected to a PC to enhance its accessibility. For example, a refreshable braille display is an assistive technology device that enables individuals who are both deaf and blind to use a PC. When connected to a PC, a refreshable braille display can work in conjunction with a compatible screen reader to provide tactile output in braille characters. Blind individuals who have been trained to read braille can run their fingers over the display to comprehend the information presented on the PC.

Many assistive technology devices utilize USB technology for connectivity. Most Lenovo PCs are equipped with at least one USB connector that adheres to the relevant USB specifications and is backward compatible. A Lenovo PC may feature a USB Standard-A connector, a USB Type-C connector, or both. If the plug type of the assistive technology device does not match the USB connector on your PC, you can easily purchase and use a USB adapter to resolve the issue.

Keyboard accessibility

The keyboard serves as the primary input device for many PC users. Lenovo keyboards, whether integrated or supplied separately with the PC, are designed and manufactured with accessibility in mind. This section highlights the accessibility features of Lenovo keyboards that benefit all users, including those with disabilities.

keyboard layout

The alphabetic keys on a Lenovo keyboard are arranged in a QWERTY layout, which is standard for input devices featuring alphabetic keys. The F and J keys have bumps that make them tactilely distinguishable from other keys. This feature serves as an orientation aid for skilled typists, allowing them to rest their index fingers without looking at the keys. Some Lenovo keyboards include a separate numeric keypad. The numeric keys are organized in four rows and three columns, arranging in ascending order from left to right and bottom to top. Additionally, the 5 key features a bump to make it tactilely distinguishable.

Standard modifier keys

Lenovo keyboards are equipped with standard modifier keys for PCs, including:

the alt key

© Copyright Lenovo 2025, 2026

the ctrl key

the shift key

the Windows logo key

These keys are extensively used as the modifier key for shortcuts by the operating system and other applications.

The tab key

The tab key is located in the leftmost column of the keyboard. For operating systems, applications, and web documents that are designed with accessibility in mind, users can press the tab key and alt + tab (in reverse order) to cycle through the interactive elements.

Hotkeys

Many Lenovo keyboards feature hotkeys in the top row, offering convenient access to frequently used settings.

The fn key and the fnlock

The fn key is a Lenovo-defined modifier key. It can be used with the top-row dual-function keys to switch their functionalities. It can also be used with several other keys to access Lenovo defined settings.

The fnlock is a switch that can be turned on and off by pressing fn + esc. Instead of holding down the fn key to switch the functionality of dual-functionkeys, you can turn on fnlock. This feature allows users to access both hotkey and function key functionalities without the need to press two keys simultaneously.

Keyboard backlight

Many Lenovo keyboards are equipped with backlights to help you use the keyboard in dark lighting conditions. The backlights can be controlled by pressing fn + Space.

Biometric devices

Some Lenovo PCs are equipped with biometric devices that facilitate easy and secure identity authentication. If your PC includes an IR LED and an IR camera, you can enable facial recognition in Windows 11. Additionally, you can use your fingerprint for authentication on PCs with a fingerprint reader. Biometric identity authentication can be particularly beneficial for users who find it difficult typing passwords.

Note: When biometric devices are used for device authentication, they are not the only available method for this purpose. If biometric authentication fails, you can use a password or PIN to sign in to Windows.

Accessibility features of Windows 11

An operating system is a crucial piece of software installed on a PC. It plays a vital role in the PC's basic functionality by providing a user interface, various tools for system management, and a foundation upon which additional specialized applications can be installed.

Microsoft's Windows 11 is a modern operating system that comes preinstalled on many Lenovo PCs. It offers a rich set of accessibility features designed for individuals with diverse disabilities. This section outlines the accessibility features available in Windows 11, explains how to activate them, and discusses the benefits they provide.

Notes: The following accessibility features of Windows have been tested and confirmed to deliver their essential functionalities on Lenovo PCs that come pre-installed with Windows 11.

- Narrator

- Magnifier

Configuring accessibility features in the Settings app

Windows 11 provides a centralized location within the Settings app for activating and configuring all accessibility features. You can access this section by selecting **Start → Settings → Accessibility**. Additionally, the keyboard shortcut Windows logo key + U provides quick access to this interface.

Narrator

Narrator is Windows 11's built-in screen-reading application. It can read screen content aloud to users and also accept input from the keyboard, enabling individuals with visual impairments to navigate effectively within Windows 11, use applications, and browse the web.

Start and stop Narrator

You can start and stop Narrator by selecting the toggle button for Narrator in the centralized Accessibility section of the Settings app. Additionally, the keyboard shortcut Windows logo key + ctrl + enter provides quick access to both the start and stop functions.

Customize Narrator

Narrator offers a variety of controls that allow you to customize it to suit your preferences. For example, you can install additional text-to-speech voices and select your preferred voice for Narrator. You also have the option to adjust the verbosity level to choose the type of content to be read. All Narrator settings are conveniently located in the centralized Accessibility section of the Settings app. Additionally, the keyboard shortcut Windows logo key + ctrl + N offers quick access to these settings.

Adjusting text sizes, applying a high-contrast theme, and using Magnifier

For individuals who find it difficult to see text clearly on the screen, Windows offers the options of adjusting text sizes, applying a high-contrast theme, and using Magnifier.

Adjust text sizes

If you find the text on the screen is too small to read, you can scale up the size of text displayed by Windows and other applications.

Step 1. Select **Start → Settings → Accessibility → Text size**.

Step 2. Use the slider and the preview pane to select a size that fits your need and then select **Apply**.

Apply a high-contrast theme

For individuals with low vision, Windows 11 offers contrast themes that enhance text readability by using a background color that sharply contrasts with the text.

Step 1. Select **Start → Settings → Accessibility → Contrast themes**.

Step 2. In the dropdown list for **Contrast themes**, select one option and then select **Apply**.

To exit a contrast theme, select **None** from the dropdown list. The keyboard shortcut for turning on and off contrast theme is left alt + left shift + prt sc.

Enable Magnifier

You can enable Windows 11 Magnifier to enlarge specific areas or the entire screen, making text and images easier to see.

Step 1. Select **Start → Settings → Accessibility → Magnifier**.

Step 2. Select the toggle to enable or disable Magnifier.

The keyboard shortcuts for enabling and disabling Magnifier are Windows logo key + Plus sign (+) and Windows logo key + esc, respectively. When Magnifier is enabled, you can use Windows logo key + plus sign (+) and minus sign (-) to zoom in and zoom out.

Sticky Keys

Microsoft Windows offers numerous keyboard shortcuts that require users to hold down a modifier key (such as shift, ctrl, alt, or the Windows logo key) before pressing one or more additional keys. While these shortcuts provide significant convenience for many users, they can pose accessibility challenges for individuals who have difficulty holding down multiple keys at the same time.

Sticky Keys is an accessibility feature in Windows that, when enabled, allows users to press keys in sequence to activate shortcut functions. For example, instead of holding down the ctrl key and the C key simultaneously, users can press each key individually to copy text to the clipboard.

To enable Sticky Keys, press the shift key five times in quick succession. When the confirmation dialog box appears, select **Yes** to disable Sticky Keys, press the shift key five times again and choose **No** when prompted.

Accessible user documentation

Documentation containing instructions for the use of the product, including its accessibility features, is available in accessible formats (such as HTML and PDF) on the Lenovo Support Website. When creating documentation, a series of industry standards and best practices are followed to ensure that the content is useful to as broad an audience as possible. Additionally, automated testing tools are employed to identify issues that may hinder the accessibility of information. These issues are addressed to the extent permitted by commonly available technologies.

Accessibility features of user documentation

By adhering to industry standards and best practices, Lenovo documentation offers numerous features that facilitate the perception and understanding of the content. Additionally, several of these features are specifically designed to ensure that users of assistive technology devices can access information comparable to that available to those who do not rely on such devices.

Perceivable content

Text content is presented using popular and easy-to-read fonts. Text colors are in high contrast with the background. Non-text elements, such as graphics and videos that convey important information, are accompanied by alternative text descriptions. Users with visual impairments can utilize screen readers to access information comparable to that available to sighted users.

Understandable content

The documentation is presented visually in a well-structured and simple layout. It also includes hidden tags or other markup information that store the content's structure, which can be utilized programmatically by assistive technologies to convey this structure to users.

Operable content

Documentation includes industry-standard tags for sectioning and interactive elements, such as titles, headings, various structural components, links, buttons, and input fields. Screen reader users can utilize standard modifier keys on the keyboard to effectively navigate and interact with the documentation.

Testing documentation accessibility

Before being officially released, Lenovo documentation undergoes testing with automated tools to evaluate its accessibility. HTML documents are assessed for compliance with the success criteria outlined in the *Web Content Accessibility Guidelines* (WCAG), a widely accepted set of standards designed to enhance web document accessibility. PDF documents are evaluated for accessibility using the accessibility checker in Adobe Acrobat for the same purpose. Automated testing tools help identify elements within a document that may present challenges when rendered by screen readers and other assistive technology devices. Accessibility issues identified by these automated tools are subsequently analyzed manually and corrected as needed.

Appendix A. Important notice for Quebec consumers

In regard to section 79.18 of Quebec's Regulation respecting the application of the Consumer Protection Act, Lenovo in no way guarantees the availability of (a) replacement parts; (b) repair services; and (c) information necessary to maintain or repair the goods. For up-to-date information on the technical support and parts available for your purchase, please consult **https://support.lenovo.com/ca/en**.

© Copyright Lenovo 2025, 2026

Appendix B. Notices and trademarks

Notices

Lenovo may not offer the products, services, or features discussed in this document in all countries. Consult your local Lenovo representative for information on the products and services currently available in your area. Any reference to a Lenovo product, program, or service is not intended to state or imply that only that Lenovo product, program, or service may be used. Any functionally equivalent product, program, or service that does not infringe any Lenovo intellectual property right may be used instead. However, it is the user's responsibility to evaluate and verify the operation of any other product, program, or service.

Lenovo may have patents or pending patent programs covering subject matter described in this document. The furnishing of this document does not give you any license to these patents. You can send license inquiries, in writing, to:
Lenovo (United States), Inc.
8001 Development Drive
Morrisville, NC 27560
U.S.A.
Attention: Lenovo Director of Licensing

LENOVO PROVIDES THIS PUBLICATION "AS IS" WITHOUT WARRANTY OF ANY KIND, EITHER EXPRESS OR IMPLIED, INCLUDING, BUT NOT LIMITED TO, THE IMPLIED WARRANTIES OF NON-INFRINGEMENT, MERCHANTABILITY OR FITNESS FOR A PARTICULAR PURPOSE. Some jurisdictions do not allow disclaimer of express or implied warranties in certain transactions, therefore, this statement may not apply to you.

Changes are made periodically to the information herein; these changes will be incorporated in new editions of the publication. To provide better service, Lenovo reserves the right to improve and/or modify the products and software programs described in the manuals included with your computer, and the content of the manual, at any time without additional notice.

The software interface and function and hardware configuration described in the manuals included with your computer might not match exactly the actual configuration of the computer that you purchase. For the configuration of the product, refer to the related contract (if any) or product packing list, or consult the distributor for the product sales. Lenovo may use or distribute any of the information you supply in any way it believes appropriate without incurring any obligation to you.

The products described in this document are not intended for use in implantation or other life support applications where malfunction may result in injury or death to persons. The information contained in this document does not affect or change Lenovo product specifications or warranties. Nothing in this document shall operate as an express or implied license or indemnity under the intellectual property rights of Lenovo or third parties. All information contained in this document was obtained in specific environments and is presented as an illustration. The result obtained in other operating environments may vary.

Lenovo may use or distribute any of the information you supply in any way it believes appropriate without incurring any obligation to you.

Any references in this publication to non-Lenovo Web sites are provided for convenience only and do not in any manner serve as an endorsement of those Web sites. The materials at those Web sites are not part of the materials for this Lenovo product, and use of those Web sites is at your own risk.

© Copyright Lenovo 2025, 2026

Any performance data contained herein was determined in a controlled environment. Therefore, the result obtained in other operating environments may vary significantly. Some measurements may have been made on development-level systems and there is no guarantee that these measurements will be the same on generally available systems. Furthermore, some measurements may have been estimated through extrapolation. Actual results may vary. Users of this document should verify the applicable data for their specific environment.

This document is copyrighted by Lenovo and is not covered by any open source license, including any Linux agreement(s) which may accompany software included with this product. Lenovo may update this document at any time without notice.

For the latest information or any questions or comments, contact or visit the Lenovo Web site:

https://support.lenovo.com

Trademarks

Lenovo, Yoga, and the Lenovo logo are trademarks of Lenovo. Microsoft, Windows, and Windows Hello are trademarks of the Microsoft group of companies. DisplayPort is a trademark of the Video Electronics Standards Association. Wi-Fi is a registered trademark of Wi-Fi Alliance. USB Type-C and USB4 are registered trademarks of USB Implementers Forum. All other trademarks are the property of their respective owners.